Thermino® ePlus Installation & User Instructions (US/CA)



NOTICE

Please read & comply with all these instructions before commencing installation.
Failure to install and operate this Heat Battery in accordance with these instructions will invalidate the manufacturer's warranty.
Please leave this manual with the customer for future reference.

CONTENTS

1. Introduction 4
1.1 General 4
1.2 Symbols Used 4
1.3 Abbreviations 5
1.4 Responsibilities 6
1.5 Warranty 8
2. Safety 9
2.1 General Safety Notices 9
3. Product Specifications 12
3.1 Technical specifications 12
3.2 General Overview 13
3.3 Dimensions 14
3.4 Weights 15
3.5 Pressure Loss 16
4. Product Overview 17
4.1 General Description 17
4.2 How it Works 17
4.3 Intended Use 18
4.4 Storage & Handling 18
5. Pre-Installation 20
5.1 Water supply 20
5.2 Locating the appliance 21

6. Installation 24
6.1 General 24
6.2 Water Connections 25
6.3 Mandatory Plumbing Components 33
6.4 Electrical Installations 35
7. Commissioning 41
7.1 General 41
7.2 Pre-Commissioning Checklist 41
7.3 Cold Commissioning Process 42
7.4 Standard Commissioning Process 43
8. Operation 46
9. Maintenance 48
10. Troubleshooting 50
11. Decommissioning & Disposal 52
11.1 Decommissioning 52
11.2 Disposal 53
12. Accessories 54

1. INTRODUCTION

1.1 GENERAL

The following instructions provide guidance for the installer and user of Thermino® ePlus Heat Batteries.

The installation must be carried out by a competent installer in accordance with local codes and regulations for plumbing, electrical installations and potable water supply.

1.2 SYMBOLS USED

In these instructions the following symbols are being used to draw the user's attention to information of particular importance.



WARNING

Indicates a hazardous situation that, if not avoided, could result in death or serious injury.



CAUTION

Indicates a hazardous situation that, if not avoided, could result in minor or moderate injury or material damage.



NOTICE

Signals information that is considered important but not hazard related.

1.3 ABBREVIATIONS

The following abbreviations are used in the manual:

- BFERV – Back-Flow Expansion Relief Valve
- DHW – Domestic Hot Water
- DSR – Demand Side Response
- EV – Expansion Vessel
- HW – Hot Water
- MCB – Miniature Circuit Breaker
- PCBA – Printed Circuit Board Assembly
- PCM – Phase Change Material
- PRV – Pressure Reducing Valve
- TMV – Thermostatic Mixing Valve
- VIP – Vacuum Insulation Panel

1.4 RESPONSIBILITIES

Manufacturer's Responsibilities
Our products are manufactured in compliance with the requirements of applicable local codes and regulations.

As an innovative company committed to achieving net zero, Sunamp continuously improves its products, which means that all specifications and other information stated in this manual are subject to change without prior notice.

Sunamp will not provide a manufacturer's product warranty in the following cases:

- Failure to abide by the instructions on using the Heat Battery.
- Faulty or insufficient maintenance of system components protecting the Heat Battery.
- Failure to abide by the instructions on installing the Heat Battery.

Installer's Responsibilities
The installer is responsible for the installation and the commissioning of the Heat Battery. The installer must:

- Ensure they are suitably qualified for the level of plumbing and electrical work required for the installation of this Heat Battery.
- Check the manufacturer's website for the most up to date information.
- Read, understand, and follow the instructions given in the manuals provided with the Heat Battery.
- Comply with the prevailing legislation and standards when carrying out the installation.

- Perform the initial start-up and carry out any checks necessary.
- Complete the commissioning procedure and checklist in this manual.
- Explain the installation to the user.
- If maintenance on system components is necessary, warn the user of the requirement to check the system components to maintain the system in good working order.
- Give all the instruction manuals to the user.

User's Responsibilities

To achieve optimum operation and longevity of the Heat Battery, the user must adhere to the following instructions:

- Check the manufacturer's website for the most up to date information.
- Read and follow the instructions provided in the manuals provided with the Heat Battery.
- Call on qualified professionals to carry out installation, initial start-up and commissioning.
- Ask your installer to explain your installation to you.
- Ensure that system components are maintained as necessary.
- Keep the instruction manuals in good condition and close to the Heat Battery.

CAUTION

Children shall not play with the Heat Battery.
Cleaning and user maintenance shall not be carried out by children.
Children must be supervised to ensure they do not play with the Heat Battery.

1.5 WARRANTY

For information on warranty terms and conditions, and product registration, please visit our website here: https://sunamp.com/warranty-registration/.

2. SAFETY

2.1 GENERAL SAFETY NOTICES



WARNING

Only competent persons suitably qualified to carry out plumbing and electrical work may undertake installations, repairs or relocations of the Heat Battery.
Product training on the full range of Thermino Heat Batteries is available from Sunamp or authorised training partners. For more information please visit: https://sunamp.com/.



WARNING

Minimum operating pressure of the Heat Battery is 22 PSI/ 0.15 MPa/ 1.5 Bar. The maximum operating pressure of the Heat Battery is 72.5 PSI/ 0.5 MPa/ 5 Bar.

WARNING

Local code-compliant domestic hot water TMVs should be fitted at the outlet from the Heat Battery. The TMV should be set to deliver hot water between **113°F and 131°F (45°C and 55°C).**
Water temperatures over 125°F (50°C) can cause severe burns instantly or death from scalds. An appropriate DHW Thermostatic Mixing Valve must be installed at the hot water outlet as per this manual.

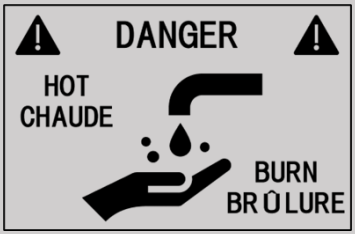

CAUTION

When following the standard commissioning procedure (section 7.4), **do not** operate the immersion heater until all heat exchanger circuits have been filled and the plumbing has been appropriately commissioned.

When following the cold commissioning procedure (section 7.3), **do not** fill, vent or purge the heat exchanger circuits until the cold commissioning procedure has been completed first.

WARNING (USER)

If this Heat Battery develops a fault, switch it off at the nearest isolator and contact the installer. Shut off the water supply to the Heat Battery if necessary.
There are no user serviceable, adjustable, or settable parts in this Heat Battery. DO NOT remove or adjust any component, cover, or part of this Heat Battery- please contact your qualified installer.
DO NOT bypass the thermal cut-out(s) in any circumstances.

3. PRODUCT SPECIFICATIONS

3.1 TECHNICAL SPECIFICATIONS

	Unit	20 ePlus	40 ePlus	60 ePlus	80 ePlus
Fresh water content[1]	L (US Gal)	3.2 (0.9)	3.2 (0.9)	6 (1.6)	12.8 (3.4)
Equivalent Hot Water Cylinder Size[2]	L (US Gal)	74 (20)	140 (37)	212 (56)	306 (81)
Volume of hot water available at 40°C (104 °F) (V40)[3]	L (US Gal)	105 (28)	199 (53)	301 (80)	436 (115)
Heat loss (power)	W (BTU/h)	20 (68.2)	28.1 (95.9)	32.1 (109.5)	34.9 (119.1)
Heat loss (energy per 24h)	kWh (BTU)	0.48 (1,638)	0.67 (2,286)	0.77 (2,627)	0.84 (2,866)
Maximum HW flow rate[4]	L (US Gal)/Min	6 (1.6)	15 (4.0)	20 (5.3)	25 (6.6)
Minimum supply pressure at Heat Battery inlet	MPa (Bar) PSI	0.15 (1.5) 22	0.15 (1.5) 22	0.15 (1.5) 22	0.15 (1.5) 22
Recommended operating pressure/PRV set point	MPa (Bar) PSI	0.3 (3) 43.5	0.3 (3) 43.5	0.3 (3) 43.5	0.3 (3) 43.5
Maximum operating pressure/PRV set point	MPa (Bar) PSI	0.5 (5) 72.5	0.5 (5) 72.5	0.5 (5) 72.5	0.5 (5) 72.5
Recommended BFERV set point	MPa (Bar) PSI	0.6 (6) 87	0.6 (6) 87	0.6 (6) 87	0.6 (6) 87
Maximum BFERV set point	MPa (Bar) PSI	0.8 (8) 116	0.8 (8) 116	0.8 (8) 116	0.8 (8) 116
Maximum design pressure	MPa (Bar) PSI	1.0 (10) 145	1.0 (10) 145	1.0 (10) 145	1.0 (10) 145
Pressure loss characteristics	-	See Figure 3			
Recommended TMV setting	°C (°F)	45 (113) - 55 (131)			
Maximum ambient temperature	°C (°F)	40 (104)			
Connected load at ~ 240 V, 50/60Hz	W	3,050			
Minimum MCB requirement (type A or B only)	A	20			

	Unit	20 ePlus	40 ePlus	60 ePlus	80 ePlus
Power supply | Standby consumption	W	1 PH AC 240 V | 7			
IP rating	-	IP31 (suitable for indoor use only!)			

Table 1 - Thermino ePlus technical specifications

Table 1 Notes:

*Note: 1 US Gal (US gallon) has been defined as 3.785411784 L; 1 W has been defined as 3.412141633 BTU/h; 1 BTU has been defined as 0.00029307107017 kWh.

1. Water content of the Heat Battery for sizing expansion vessels.
2. Calculated from the storage capacity of the Heat Battery and assuming that the equivalent hot water cylinder thermostat is set at 60°C (140°F), mains cold water inlet temperature is at 10°C (50°F) and the stored energy utilisation factor of the cylinder is 0.85.
3. The hot water volume available from the Heat Battery normalised to an average outlet temperature of 40°C (104°F) when it is fully charged by the electric heating element.
4. While the Heat Battery can deliver higher flow rates than those listed, doing so will result in reduced performance in terms of duration of discharge and energy provided.

3.2 GENERAL OVERVIEW

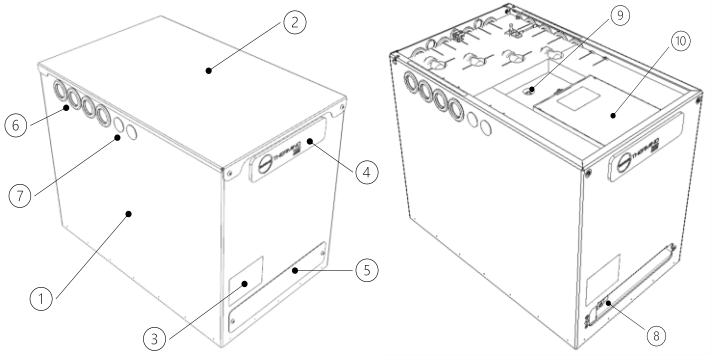

Figure 1 - General overview of the Thermino ePlus Heat Battery

Item	Description
1	Heat Battery - Main body

Item	Description
2	Heat Battery - Lid
3	Heat Battery data badge / Serial number
4	Controller interface
5	Heater terminal cover plate
6	Pipe entries (3 sides)
7	Cable entries (3 sides)
8	Non-self-resetting thermal cut-out (Remove Heater Terminal cover plate (5))
9	Heat Battery Temperature Sensor Dry Pocket*
10	Heat Battery Controller

Table 2 - General overview of the Thermino ePlus Heat Battery

*Do not insert temperature sensors other than those supplied with the Heat Battery.

3.3 DIMENSIONS

General Dimensions

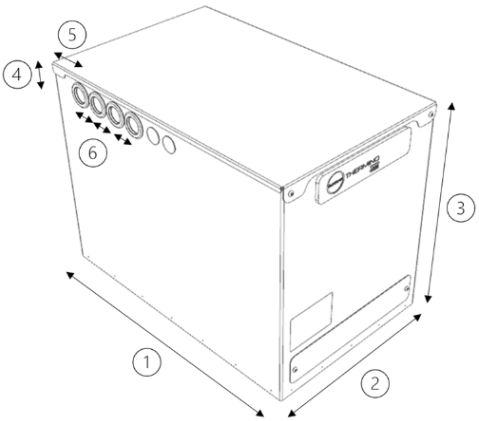

Figure 2 – Thermino ePlus Heat Battery dimensions

All data in mm (inch)		Thermino 20 ePlus	Thermino 40 ePlus	Thermino 60 ePlus	Thermino 80 ePlus
1 – Length		575 (22.6)			
2 – Width		365 (14.4)			
3 – Height		440 (17.3)	640 (25.2)	870 (34.3)	1050 (41.3)
Centre of side pipe-entry from	4 -Top	37 (1.5)			
	5 - Rear	78 (3.1)			
	6 - Centre of next pipe	50 (2.0)			
Centre of rear pipe-entry from (not shown)	Top	37 (1.5)			
	Sides	78 (3.1)			
	Centre of next pipe	70 (2.8)			

Table 3 – Thermino ePlus Heat Battery dimensions

3.4 WEIGHTS

NOTICE

Weight (empty) refers to an **empty Heat Battery** (i.e. no water in the heat exchanger); **Weight (filled)** refers to the heat battery when the heat exchanger is filled with water.

All data in kg (lbs)	Thermino 20 ePlus	Thermino 40 ePlus	Thermino 60 ePlus	Thermino 80 ePlus
Weight (with packaging)	78 (172)	139 (306)	175 (386)	223 (492)
Weight (empty)	75 (165)	136 (300)	172 (379)	220 (485)
Weight (filled)	79 (174)	140 (309)	178 (392)	233 (514)

Table 4 – Thermino ePlus Heat Battery weights

3.5 PRESSURE LOSS

The Pressure Loss values detailed in
Figure 3 are the pressure differences between the Cold-Water Inlet (Port A or Port A&B for Thermino 80 ePlus) and Hot Water Outlet (Port D or Port C&D for Thermino 80 ePlus) of the Heat Battery.

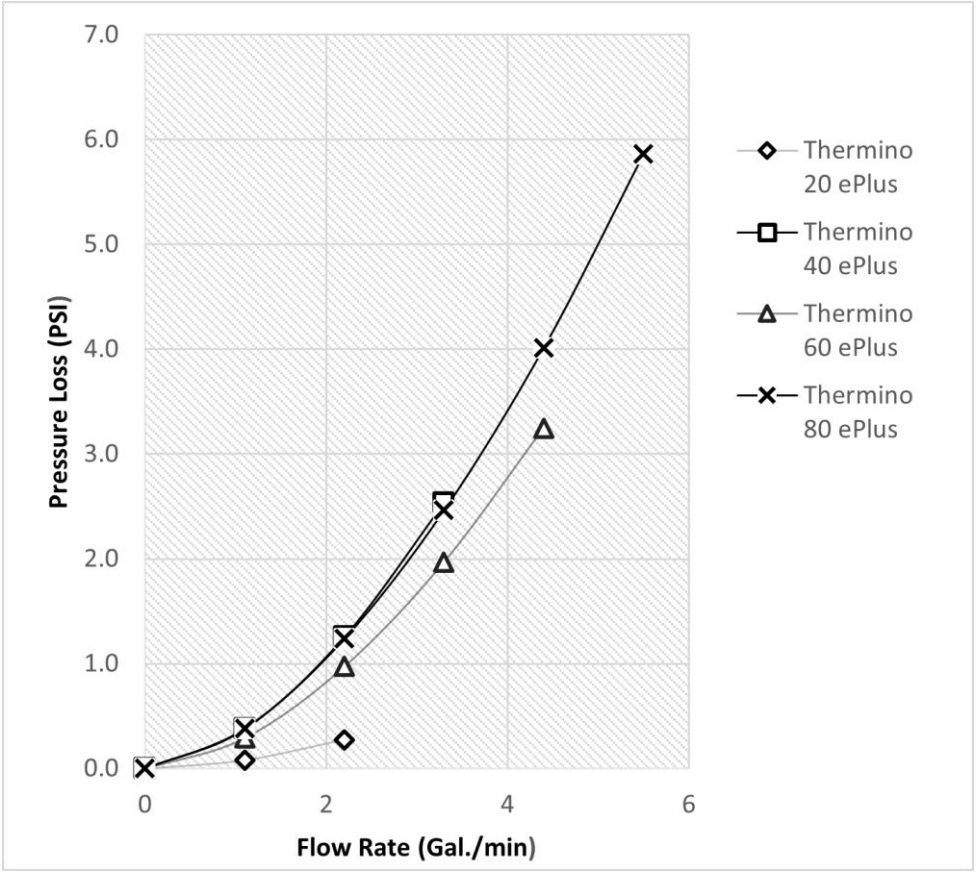

Figure 3 – Thermino ePlus Heat Batteries pressure loss

4. PRODUCT OVERVIEW

4.1 GENERAL DESCRIPTION

Sunamp Thermino® ePlus Heat Batteries are modern-day, energy-saving thermal stores made with a high performance Phase Change Material (PCM) to deliver fast-flowing hot water reliably, safely, and efficiently. Up to four times smaller than the equivalent hot water cylinder, the sleek, super-compact design means the Thermino looks great in any home and frees up valuable storage space. They are also easy to install and require no mandatory annual maintenance (see Section 9 for more information).

Thermino ePlus Heat Batteries are charged by the internal heating element and can be configured to work with electricity from the power grid only.

4.2 HOW IT WORKS

The secret to the success of Sunamp Heat Batteries is our world leading, patented Plentigrade® technology. The Thermino range uses the high performance, non-toxic and non-flammable Plentigrade P58 PCM to deliver hot water on demand.

PCMs absorb, store and release large amounts of latent heat when changing state between solid and liquid. Our unique formula stores up to four times more energy than water over the same temperature range, which means Thermino Heat Batteries are up to four times smaller than the hot water cylinders they replace.



The ‘Sustained with Plentigrade’ quality mark on our products is assurance of performance, efficiency, material safety, and reliability.

4.3 INTENDED USE

Sunamp Thermino ePlus Heat Batteries are intended for use as hot water appliances for domestic and residential uses only.

The product is intended for installation in a frost-free and weather-protected environment, where it cannot be damaged by weather conditions.

4.4 STORAGE & HANDLING



WARNING

Take into account the weight of the Heat Battery (Table 4) and local Health & Safety Regulations and Practices when considering safe lifting methods for moving the Heat Battery.
Verify all floors during transportation, storing or installation of the Heat Battery are suitable for the product weight (Table 4).
The Heat Battery MUST not be stepped or sat on at any time during storage, handling, installation and use.



CAUTION

The Heat Battery must be installed in a dry, weather-protected and frost-free environment. The Heat Battery will incur damage if exposed to weather conditions including but not limited to rain, snow and extremes of temperature.

CAUTION

Handle products with care! Use appropriate automated lifting equipment (contact Sunamp Customer Service for further information).

- Do not tilt the product more than 45 degrees during the transportation or installation process
- Do not drop the product

5. PRE-INSTALLATION



CAUTION

Ensure that the following requirements have been considered and are met before choosing or installing a Sunamp Thermino Heat Battery.

5.1 WATER SUPPLY

- The Heat Batteries are not suitable for gravity tank-fed hot water systems. Tank fed hot water systems have to be converted to mains pressurised systems when installing a Sunamp Heat Battery.
- Ensure that the water supply requirements are within the Minimum and Maximum Pressure & Maximum Flow Rates detailed in (Table 1).
- Where mains water hardness can exceed **120 ppm Total Hardness**, you MUST install a scale reducing device in the cold-water supply to the Heat Batteries.
- Limescale can be controlled using chemical limescale inhibitors, polyphosphate dosing, electrolytic scale reducers or water softeners (please refer to the manufacturer's instructions for servicing any water conditioning system).
- All system components used in the Heat Battery installation MUST be suitable for potable water and approved by local water regulations.
- Use of the Heat Battery in combination with any additives to water (with the exception of suitable water softeners in areas where water hardness exceeds 120ppm – please

refer to above points), including dye, coolant or soldering flux, will invalidate the Heat Battery warranty and are not considered standard intended use.

5.2 LOCATING THE APPLIANCE



CAUTION

The Heat Battery MUST be installed indoors and in a frost-free environment with all connected pipework having adequate insulation to avoid freezing.
Installations in locations such as unheated attics, garages etc may result in damage to the appliance and will affect your warranty. To be covered by warranty, the following conditions **must** be met:

- All connected pipework must be adequately insulated to prevent them from freezing
- Any external facing walls of garages, attics or lofts must be adequately insulated
- attics and/or lofts must also be accessible via a main staircase suitable for automated stairclimbing equipment

For more information, please contact Sunamp Customer Service.



NOTICE

Installation of the product at a height may affect the terms of your warranty. For products installed at a height, the following conditions **MUST** be met to enable Sunamp to

safely support product warranty claims where the product has not been installed at floor level:

- lifting of products **must** be conducted by suitable mechanical means/equipment, and the product **MUST not** be tilted during removal
- a ledge or reinforced ground support **MUST** be installed (if applicable) to support the size and weight of the heat battery (see Tables 3 and 4)
- the product clearance requirements **MUST** be accounted for (see Table 5)
- if the unit is installed at height of more than 800mm from floor level, it is the owner/user's responsibility to contact their installer and arrange for the appliance to be decommissioned and safely returned to floor level in the event of any warranty replacements, and then recommissioned thereafter
- Thermino 80 ePlus products **MUST** only be installed at floor level

Assess the location where the Heat Battery will be installed, for the spatial & clearance requirements of the Heat Battery (Figure 4, Table 5).

- Ensure that the location chosen has a hard, solid and level surface that can withstand the weight of the Heat Battery as detailed in (Table 4)
- Ensure that the Heat Battery can be transported to the desired installation location, taking into account the weight of the Heat Battery and safe lifting methods according to local Health & Safety Regulations and Practices.
- If using multiple Heat Batteries, do not stack the Heat Batteries with internal controller directly on top of each

other. Racking must be used to ensure access to the water connections and controller.

- The following clearances are required for serviceability and maintenance access (this is not an operational requirement):

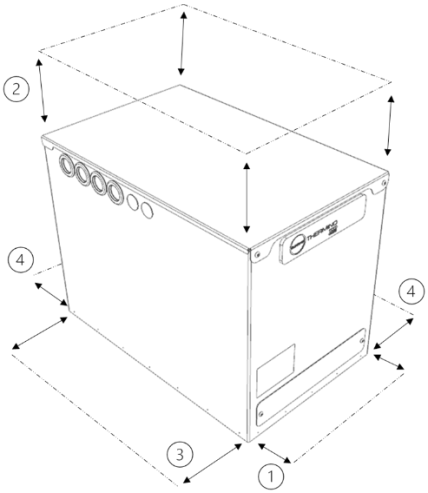

Figure 4 – Thermino ePlus Heat Battery Spatial Requirements

Item	Distance in mm (inch)	Notes
1	150 (6)	To access terminal cover and to ensure visibility of the data badge and LEDs
2	450 (18)	To remove lid and access internals
3	150 (6)	To allow for pipe and cables entry and minimum cable-bend radiuses (side dependent)
4	10 (0.5)	If no access required (side dependent)
-	< 3000 (118)	Recommended length of cable runs

Table 5 - Thermino ePlus Heat Battery Spatial Requirements

6. INSTALLATION

6.1 GENERAL

WARNING

Before commencing the Hydraulic Installation of the Heat Battery, you must ensure that the Heat Battery is electrically isolated from the Mains.

CAUTION

To avoid damage to the VIP insulation of the appliance do not:
-Carry out work that may leave sharp or abrasive residue in the Heat Battery, such as deburring of pipes, drilling of holes or stripping of wires above the open appliance.
-Deposit tools in the open appliance.
-Use sharp objects, such as cutters or similar, to cut grommets or insulation layers while they are located in the appliance.

NOTICE

Prior to installing the Heat Battery, please familiarise yourself with the product by looking at Figure 1 & Table 2 (general product overview) and ensure that all pre-installation requirements (Chapter 5) are met.

- Remove lid. The lid is secured by 2 x M5 (8/32″) button head cap screws at the front and two locating pins at the back (Figure 5):
    - (1) Remove 2 x M5 (8/32″) button head cap screws using 3mm hex head and set aside.
    - (2) Slide the lid forward, (3) then lift the lid up and set aside.

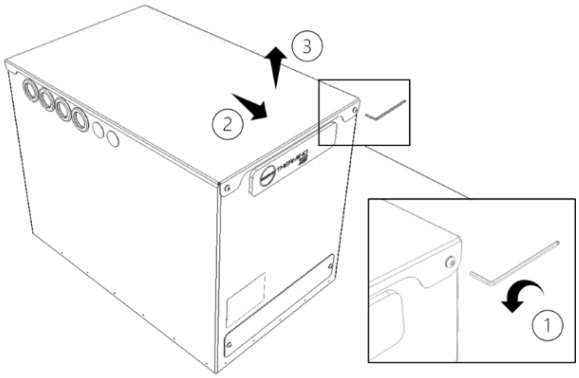

Figure 5 – Lid Removal of Thermino ePlus Heat Battery

6.2 WATER CONNECTIONS

WARNING

All connection pipe work inside the Heat Battery casing MUST be using **Ø 22mm (3/4″) copper pipe**. This is to allow the earth connection between the case, inlet, and outlet pipe fittings.

CAUTION

All Plumbing components used for the Heat Battery installation MUST be approved for use with potable water according to local water regulations.
Do not fit any check valves between Heat Battery, BFERV & Expansion Vessel.
The Heat Battery controller lid MUST be kept closed whilst performing any hydraulic works. This is to avoid water or particles coming into contact with the PCBA and other electrical components & wiring of the Heat Battery controller.
Do not carry out hot works on the appliance.

Please follow the instructions below in conjunction with Figure 7 &

Figure **8** for the Heat Battery hydraulic installation:

NOTICE

Sizing of the pipe work must consider mains water supply pressure, the design flow rates, size of the Heat Battery and pressure loss detailed in
Figure **3**.

- Remove the top two layers of insulation (layer 1 is 10mm (3/8″) and layer 2 is 32mm (1 ¼″) thick) and set aside.
- Rotate the elbows to the side you wish to connect the hydraulics (left, right or back) (Figure 6).
- For Thermino 20, 40 & 60 ePlus products, the cold water inlet must be connected to Port A & the hot water outlet to Port D (Figure 6, left hand side).

- For Thermino 80 ePlus products, the cold water inlet must be branched into Ports A & B and the hot water outlet branched into Ports C & D (Figure 6, right hand side).

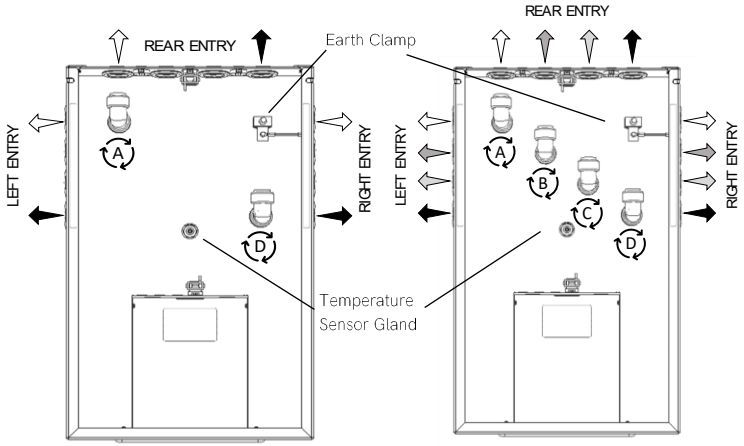

Figure 6 - Thermino ePlus Ports ((20- 60) left, 80 right)

- Remove the respective rubber grommets (Item 3 – Figure 10) in the outer housing and cut the centres (with a cross) with a knife. Re-insert the cut grommets. Do not cut the grommets in place, as this may damage the VIP.

NOTICE

It is recommended that the pipes exiting the Heat Battery are installed in a manner that avoids thermo-syphons, as this may increase the heat losses of the installation.

- Cut and prepare the necessary lengths of 3/4" ASTM B88 Type L Blue copper pipe to suit the rest of the installation / system:
    - Always cut the pipe uniformly and at a 90-degree angle, using a rotary pipe cutter whenever possible. Ensure the cutter wheel is appropriate for the copper pipe.

- Deburr the pipe end, both internally and externally to create a 1mm chamfer on the outside of the pipe.
- Check the pipe ends are free from damage and clean, wiping away any swarf to avoid damaging the 'O' ring inside the push-fit elbow upon pipe insertion.
- The pipe end must also be free from stickers, tape and adhesive residues.
- Mark the socket depth (27mm (1 1/16") on the pipe with a marker.
- Insert the pipe firmly with a slight twisting action until it reaches the pipe stop with a positive "click".
- Ensure the depth insertion mark corresponds with the mouth of the fitting, then pull firmly on the pipe to ensure the fitting is secure.

- Fit the earth clamp to the copper pipe.
- Connect to the rest of the fixed system hydraulics.
- If carrying out hot works (such as soldering, welding or brazing) these must be performed on pipes detached from the Heat Battery (minimum 1 meter (3 ft) away).
- Fill the system with water, purging any air out of the system. This may take several minutes and can be aided by repeatedly opening and closing the outlet.

NOTICE

To be carried out only if cold commissioning procedure is not required prior to standard commissioning procedure! Please refer to section 7.3.

- Once finished purging and with the system pressurised, inspect the piping/tubing and joints for any leaks. Take remedial action if necessary.

NOTICE

After completion of the leak checks or commissioning process, all connected pipes MUST be adequately insulated for **at least 1m (3 ft)** from their connection points with the Heat Battery to avoid increased heat losses through the connected pipework.

Item	Description	Notes
1	Heat Battery Isolation Valve	This **MUST** be fitted (please see Table 7 for more information).
2	Mains Cold Water Pressure Reducing Valve	This **MUST** be fitted (please see Table 7 for more information).
3	Main Check Valve	
4	Mains Back-Flow Expansion Relief Valve	This MUST be fitted. The maximum rating of the Valve MUST be no higher than 8 Bar (116 PSI) (please see Table 7 for more information).
5	Expansion Vessel/Shock Arrestor	This **MUST** be fitted. The Charge Pressure of the EV/Shock Arrestor **MUST** be equal to the pressure setting of the PRV (item 2) (please see Table 7 for more information).
A, B	Cold Water Inlet connection to Heat Battery port A (or ports A&B)	Combine ports A&B using 3/4" ASTM B88 Type L Blue copper pipe for Cold Water Inlet connection for Thermino 80 ePlus.
C, D	Hot Water Outlet connection to Heat Battery port D (or ports C&D)	Combine ports C&D using 3/4" ASTM B88 Type L Blue copper for Hot Water Outlet connection for Thermino 80 ePlus.
6	Anti-thermosiphon (U-bend) pipework	Recommended if the pipework from the appliance is plumbed horizontally or vertically upwards.
7	Hot Water Thermostatic Mixing Valve	This MUST be fitted & regulated to provide hot water output ranging between 45°C (113°F) and 55°C (131°F).
8	Hot Water Flow Regulator Valve	Set the flow rate at the outlet of the Heat Battery to match the maximum recommended flow rate for the relevant Heat Battery size (Table 1).
9	Hot Water Isolation Valve	
-	Pipework Insulation	All exposed pipework should be adequately insulated.

Table 6 – Figure 7 & Figure 8 diagram descriptos

CAUTION

Ensure the Heat Battery has unobstructed pathways to the expansion vessel and expansion relief valves on the secondary circuit.
Do not place any isolation valves between expansion relief points and the Heat Battery.
Do not shut off any isolation valves while the Heat Battery is in operation. Always switch off the appliance and external heat source before engaging any isolation valves.

CAUTION

If installing a Heat Battery at a height above the lowest tapping point in the household, consider installing an anti-vacuum valve.

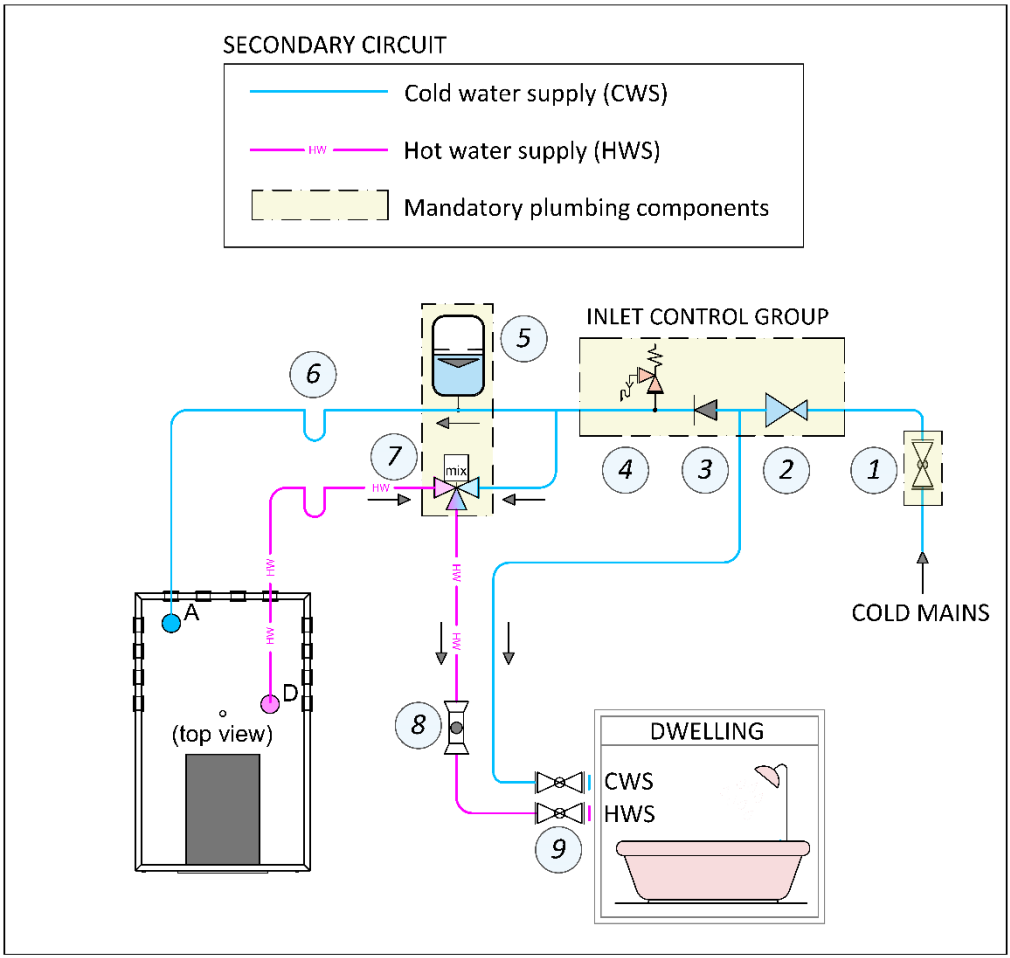

Figure 7 - Thermino 20, 40 & 60 ePlus plumbing diagram

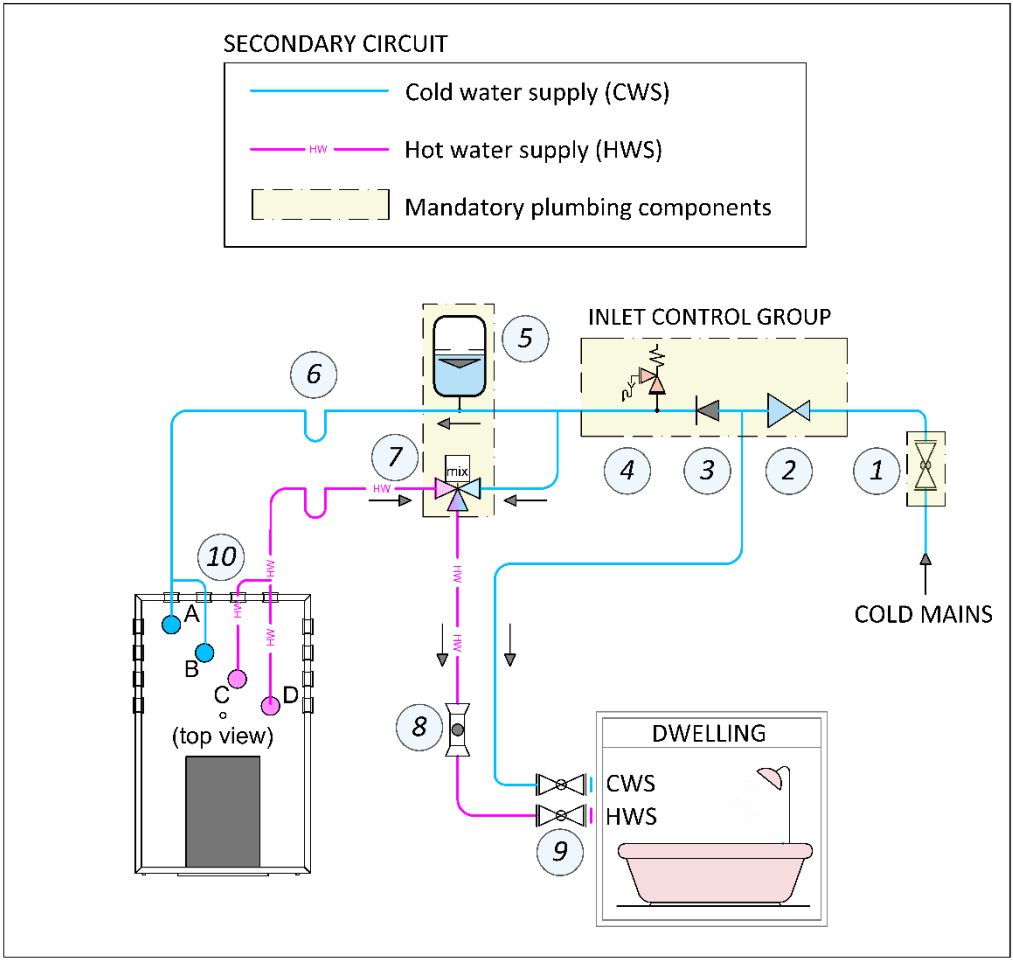

Figure 8 - Thermino 80 ePlus plumbing diagram

6.3 MANDATORY PLUMBING COMPONENTS

CAUTION

The components within the dotted borders In Figure 7 and Figure 8 MUST be fitted with each Heat Battery installation (NOT fitting them may lead to Heat Battery damage and invalidation of the warranty).
The BFERV can be located away from the Heat Battery, provided there are no check valves between the BFERV and the Heat Battery. The BFERV can be discharged in existing internal or external drainage in accordance with local codes and regulations.

WARNING

Local code-compliant domestic hot water TMVs should be fitted at the outlet from the Heat Battery. The TMV should be set to deliver hot water between **113°F and 131°F (45°C and 55°C).**
Water temperatures over 125°F (50°C) can cause severe burns instantly or death from scalds. An appropriate DHW Thermostatic Mixing Valve must be installed at the hot water outlet as per this manual.

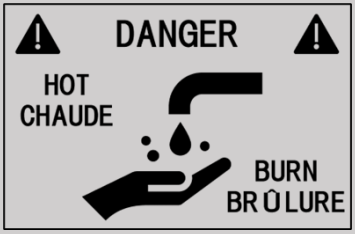

The following plumbing components are mandatory and are required for the Heat Battery warranty to be valid (items 1, 2, 4, 5 & 7 MUST ALWAYS be fitted. The remaining items must be fitted in certain circumstances – please refer to the Notes. Please also refer to the manufacturer's instructions for the maintenance of these components):

Item	Description	Notes
1	Heat Battery Isolation Valve	**MUST** be fitted in order to enable safe & adequate Heat Battery maintenance (if required).
2	Mains Cold Water Pressure Reducing Valve	The maximum rating of the PRV **MUST** not exceed the maximum operating pressure of the Heat Battery (see Table 1).
4	Mains Back-Flow Expansion Relief Valve	The maximum rating of the ERV **MUST** be no higher than 8 Bar (116 PSI). The operation of the component must be checked and deemed satisfactory in accordance with the manufacturer's maintenance instructions, and preferably coincide with the expansion vessel maintenance intervals.
5	Expansion Vessel/Shock Arrestor	Charge Pressure of the EV/Shock Arrestor **MUST** be equal to the pressure setting of the PRV (item 2). A minimum of 0.5L expansion vessel is required (please follow the correct calculation methodology for sizing EVs). The charge pressure must be checked & topped up in accordance with the expansion vessel manufacturer's instructions for maintenance or annually, whichever is sooner.
7	Hot Water Thermostatic Mixing Valve	MUST be fitted & Regulated to provide hot water output ranging between 45°C (113°F) and 55°C (131°F).
-	Water Conditioner	MUST be installed in areas where water hardness can exceed 120ppm.

Table 7 – Mandatory plumbing components

6.4 ELECTRICAL INSTALLATIONS



WARNING

All Electrical wiring must be carried out by a competent person and be in accordance with the latest local wiring codes and regulations.



WARNING

Risk of electric shock – potential dual-supply. Always isolate the power supply/ies to the Heat Battery controller before working on the appliance.



CAUTION

Each Heat Battery must be protected by its own 20A MCB (type A or type B only) and have a double pole isolating switch with a contact separation of at least 3mm (0.12″) in both poles, which is located in close proximity to the Heat Battery.



CAUTION

The Heat Battery must be filled with water and fully vented before switching on the Heat Battery electrical supply.

CAUTION

You must use the strain reliefs supplied with the product to ensure cables are secured in place.

The following Figure 9 identifies the location of terminals and types of wiring used inside the Thermino ePlus Heat Battery controller.

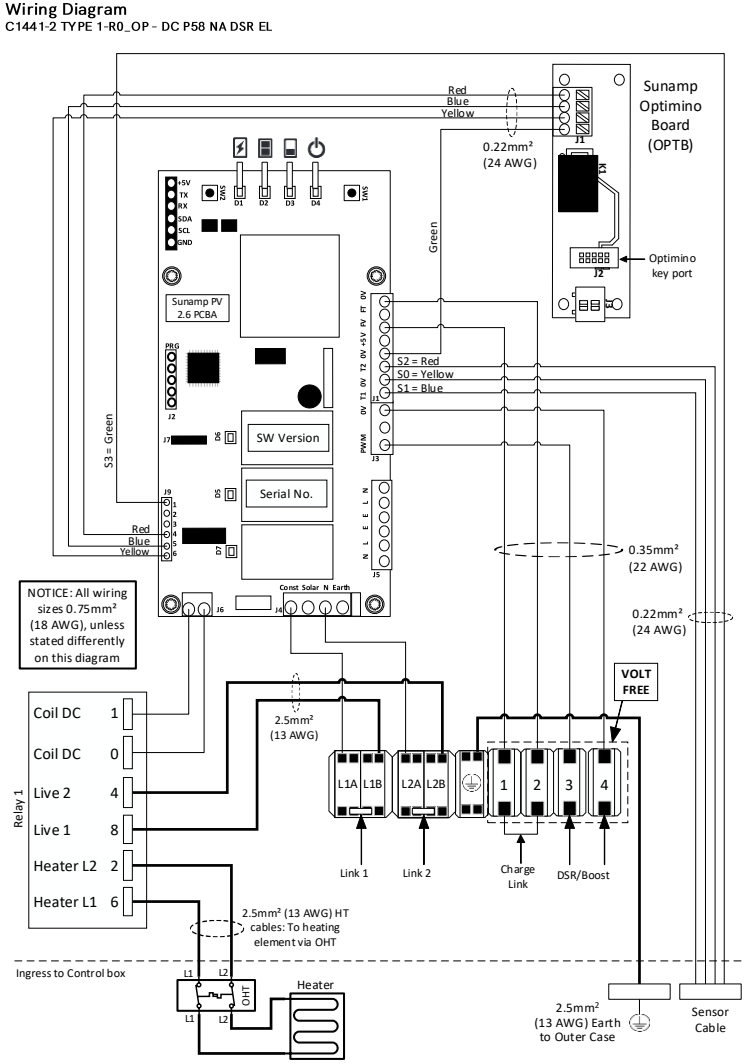

Figure 9 - Thermino ePlus Heat Battery wiring overview

NOTICE

For installation-specific wiring configurations, please refer to sections 6.4.1-6.4.2.

- (Refer to Figure 10) Move the cable strain relief fittings (1) to the side you wish to make the entries / exits. Cover all other holes in the enclosure with the supplied blanking grommets (2).

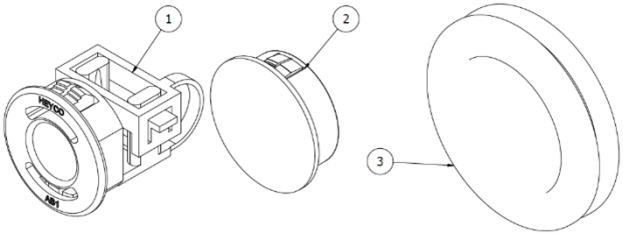

Figure 10 - Thermino Heat Battery Grommets & Strain Reliefs

- Follow the electrical installation type for the Heat Battery in section 6.4.1.
- Feed the mains cable through the strain relief bushing in the Heat Battery housing.
- If applicable, feed any input or output cables through the additional strain relief fittings provided. Refer to Section 6.4.2 for details.
- Line up the cable strain relief fitting ratchet and compress firmly so that the fitting grips the cable.
- Open the internal controller enclosure using a flat head screwdriver to remove the snap in' lid.
- Connect the wires according to the wiring options if not already fitted.
- Remove or make links according to the wiring options.

- Close the internal controller enclosure by replacing the ‘snap fit’ lid.
- Ensure that the Heat Battery is earthed correctly by checking that the earth clamp on the copper pipe is secure.

6.4.1 Electrical Installation

When using the Thermino ePlus Heat Battery with a 24/7 mains power supply, the following wiring setup is required. Please refer to Section 6.4.2 for optional control elements, such as timers or boost buttons.

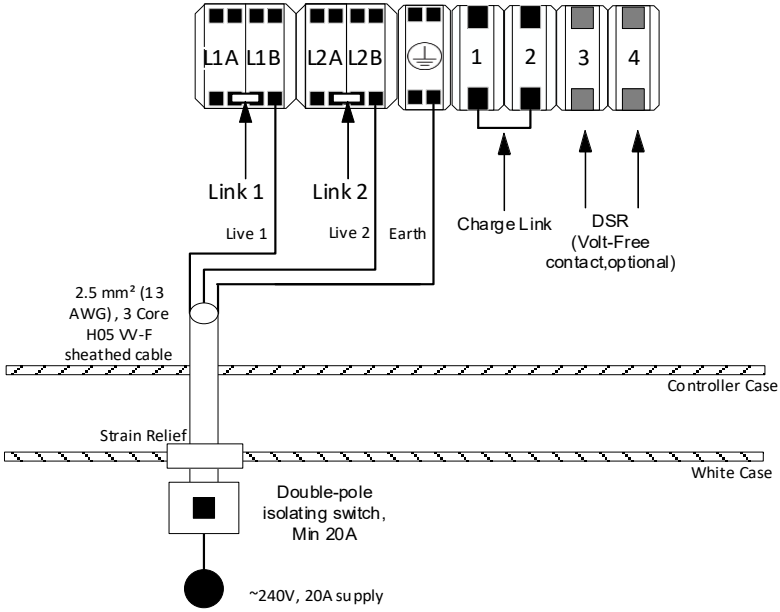

Figure 11 - Thermino ePlus Heat Battery wiring

6.4.2 Optional Control Inputs & Outputs

CAUTION

Applying excessive downward force onto the PCBA can break the soldering joints. Always remove plug connectors before adding or removing wiring to the screw terminals.

Wiring requirements of the optional inputs & outputs of the Heat Battery can be found in Table 8. The operation details of the inputs & outputs can be found in Section 8.

Function (I/O)	Type	Location	Cable Specification
Time Switch* (Input)	Volt-Free / Dry Contact	Orange Block Connectors "1" & "2" **	H05 VV-F, 0.75mm^2, (18AWG) 2 core sheathed cable
DSR/ Boost (Input)	Volt-Free / Dry Contact	Orange Block Connectors "3" & "4"	H05 VV-F, 0.75mm^2, (18AWG) 2 core sheathed cable
Notes: *This function is only available when using the Thermino ePlus Heat Battery in a direct grid capacity. The Charge Link must be removed to enable volt-free timer control. ** The Charge Link must be replaced with the volt-free time switch wiring.			

Table 8 – Thermino ePlus Controller Inputs & Outputs

7. COMMISSIONING

7.1 GENERAL



CAUTION

Before commissioning the Heat Battery, first check that you have properly reviewed the previous sections, particularly regarding Heat Battery specifications as well as location, electrical supply and water supply requirements.



CAUTION

When following the standard commissioning procedure (section 7.4), the Heat Battery and its associated pipework must be filled and fully vented before the Heat Battery power supply is switched on.

When following the cold commissioning procedure (section 7.3), **do not** fill, vent or purge any heat exchanger circuits until the cold commissioning procedure has been completed first.

7.2 PRE-COMMISSIONING CHECKLIST

- Check all packaging material has been removed.
- Check all components are clean and undamaged.
- Identify the correct commissioning procedure to follow (section 7.3 or 7.4)

- Adjust PRV if the Pressure exceeds 5 Bar (0.5MPa, 72.5 PSI).
- If present, adjust the flow regulator valve to within the maximum recommended flow rate for the Heat Battery size installed.

7.3 COLD COMMISSIONING PROCESS

CAUTION

The Cold Commissioning Process must be followed if the Heat Battery was either stored or transported in ambient temperature conditions below 0°C (32°F) for more than 24h prior to installation.

DO NOT fill, vent or purge any pipes before this commissioning process has been completed first!

NOTICE

Refer to document D0114 'Cold Commissioning Process for Thermino Products' (available on our website) for the steps that must be followed

NOTICE

When the correct cold commissioning procedure has been completed in full, proceed with the standard commissioning process as outlined in this Installation and User Instructions Manual (section 7.4).

7.4 STANDARD COMMISSIONING PROCESS

1. Check that the temperature sensor of the Heat Battery has not become dislodged during transport and is fully inserted into its pocket. The white marker should be sitting on top of the blue cable gland (see Figure 6).
2. Turn on the water supply and check that there are no leaks.
3. Fully open any hot water tap or shower that delivers the highest flowrate in the dwelling and allow it to run for a **minimum time of 2 minutes**. This is for any air to leave the system. This may vary depending on Heat Battery model size.

> NOTICE
>
> For larger models such as the Thermino 60 ePlus & Thermino 80 ePlus, the **minimum flush time should be increased to 4 minutes**.

4. Switch on the power supply to the Heat Battery.
5. If present, press the BOOST button on the time switch to start charging the appliance.
6. Continue to run the tap for a further 2 minutes, then close.
7. Check the front of the Heat Battery to ensure that the “power” and “heating element” LEDs are lit (see Figure 12 & Table 9).
8. Allow the Heat Battery to charge for approximately 30 minutes with the hot water tap closed.
9. Please note that on first charge or when the Heat Battery has been switched off and cooled down the heating element will cycle ON and OFF for up to one hour, depending on the Heat Battery size. This is normal operation. If heating element cycling persists for more than one hour, please refer to Table 10.

10. After 30 minutes open the hot water tap/s and check for hot water.

11. Water temperatures over 125°F (50°C) can cause severe burns instantly or death from scalds. An appropriate Hot Water Thermostatic Mixing Valve must be installed and adjusted so that the output temperature is between 45°C (113°F) to 55°C (131°F).

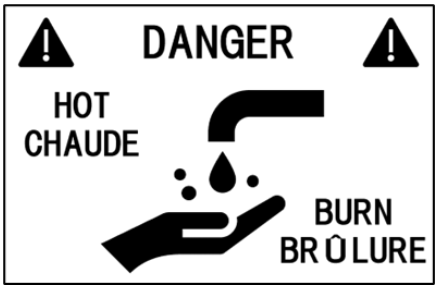

12. Check hot water temperature at all hot water outlets in the dwelling with the customer and advise on temperature settings.

13. Ensure that the Heat Battery charges to half charge and that there are no lights flashing (which may otherwise indicate an error, Table 10).

14. Once the installation is finished, please carry out the following steps:

    - Explain to the customer / end user all safety precautions. Fill in and return the Commissioning certificate provided with the product. These documents MUST be completed and returned to Sunamp after the installation.
    - Leave all product information and literature with the customer / end user.
    - It's the responsibility of the end user to supply this manual to any other subsequent users.

Final Fit After Commissioning:

Commissioning instructions are provided in this Section 7 of the manual. Follow the instructions below after commissioning.

- Cut the 32mm (1 ¼″) thick insulation layer to suit the pipe and cable entries. This layer has several perforations for guidance. This can be done with a sharp knife or scissors. Please DO NOT cut inside the Heat Battery and in close proximity to the Vacuum Insulation panels located at the side of the Heat Battery.
- Re-place the newly cut 32mm (1 ¼″) thick insulation layer nesting the insulation around the pipe work and cables. Make sure the main and signal cables sit above this layer.
- Re-place the 10mm (1/2″) top layer of insulation.
- Re-place the lid, aligning the rear pins with the slots in the rear of the unit, slide back, fit the 2 x M5 (8/32″) button head cap screws using 3mm (1/8″) hex key.
- Fix any Energy labels provided in the document pack to product main body.

8. OPERATION

LED operation

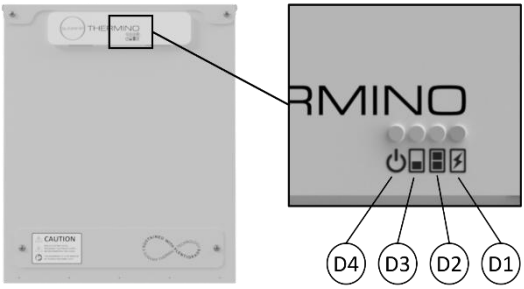

Figure 12 – Thermino ePlus Heat Battery LED operation

LED	Function	Status	Operation Description
	Mains Power LED (D4)	OFF	Power OFF
		ON	Power ON
		Pulsing	Faulty temperature sensor string (see Troubleshooting – section 10 for more information)
	Charge Level Status 1 (D3)	OFF	Heat Battery ON – no charge demand
		Pulsing	Heat Battery charging from 0 - 50%
		ON	Heat Battery charge level >50%
	Charge Level Status 2 (D2)	OFF	Heat Battery charge level 0 - 50%
		ON - Pulsing	Heat Battery charging from 50 - 100%
		ON - Solid	Heat Battery charge level 100%
	Heating Element Operation (D1)	OFF	Heating element INACTIVE
		Solid	Heating element ACTIVE

Table 9 – Thermino ePlus Heat Battery LED operation

The following settings detail the operation of the additional wiring functions available in Section 6.4.2

DSR/Boost operation

This function forces the Heat Battery to charge or "top up" when there is a DSR demand to allow the Heat Battery to maximise the use of low-cost tariffs. Please note that the input to the Heat Battery controller MUST be Volt-Free for this function.

Time Switch Operation

This function allows to configure charging times for the Heat Battery. Please note that the input to the Heat Battery controller MUST be Volt-Free for this function.

9. MAINTENANCE



CAUTION

Where undertaking maintenance, repairs or removals, and where necessary, ensure that the system is first disconnected from the electrical and/or water supply.

- In areas where the mains water hardness can exceed 120 ppm Total Hardness and a scale-reducing device has been fitted, the service and maintenance requirements of this device (especially re-fill requirements) need to be adhered to.
- The air pressure in the expansion vessel MUST be checked and topped up in line with the expansion vessel manufacturer's instructions for maintenance or annually, whichever is sooner.
- The peripherals and accessories that are part of the Heat Battery install MUST be maintained according to their manufacturer's instructions.
- Except for the system components identified above, the Heat Battery does NOT require any regular maintenance.
- No access to the PCM container is required in the field under any circumstances. Breaching the PCM containment will void the warranty of the product.
- The product does not require any regular cleaning. Should the product exterior become dirty, it can be wiped down with a damp cloth and a mild detergent after having been isolated from the mains supply. Let the product dry before reconnecting.
- If the supply cord is damaged, it must be replaced by the manufacturer, its service agent or similarly qualified persons in

order to avoid a hazard. Please refer to the Electrical wiring sections.

10. TROUBLESHOOTING

WARNING

All Electrical wiring should be carried out by a competent person and be in accordance with the latest local wiring codes and regulations.

WARNING

Risk of electric shock – potential dual supply. Always isolate the power supply/ies to the Heat Battery controller before working on the Heat Battery.

Fault	Possible Cause(s)	Possible Solution
The Heat Battery does not deliver hot water after installation	Heat Battery not powered or not powered correctly	Check wiring and power supply to Heat Battery and rectify where necessary
	Non-self-resetting thermal cut-out has tripped	Make sure the Heat Battery is full of water and purge if necessary: 1. Disconnect the power supply 2. Open the electrical cover at the base of the Heat Battery (Figure 1 -RHS image) 3. Reset the non-self-resetting thermal cut-out on Left Hand side of the panel. 4. Check if the temperature sensor is fully inserted in the Heat Battery (Section 7.3) 5. Reassemble the Heat Battery, and 6. Reconnect the supply. **If the problem persists, please contact Sunamp Ltd.**

Fault	Possible Cause(s)	Possible Solution
LED D4 (power symbol) is rapidly flashing	Loose temperature sensor string connection OR Faulty temperature sensor string OR Internal temperature < 0°C (32°F)	Check that the sensor cable is properly connected to the PCBA and that the connector block or screw terminal is making good contact. If internal temperature below 0°C (32°F) is suspected, ensure that the cold commissioning procedure outlined in document D0114 is completed prior to fully commissioning the product, and reobserve the LED behaviour. **If the problem persists, please contact Sunamp Ltd.**
The flowrate from the Heat Battery is lower than expected	Air might still be trapped in the system	Check that the mains supply valve is fully opened. Make sure the Heat Battery is fully de-aired and purge if necessary.
	Incoming water pressure is too low	Measure the incoming pressure from the mains supply and **contact Sunamp Ltd.**

Table 10 – Troubleshooting of Thermino ePlus Heat Battery

11. DECOMMISSIONING & DISPOSAL

11.1 DECOMMISSIONING

To successfully decommission the Heat Battery, please carry out the following steps:

1) Switch off all Electrical Power Supplies to the Heat Battery.
2) If Heat Battery is charged and no leaks are present, cool down the Heat Battery by flowing cold water through, until the temperature at the Outlet side is equal to the temperature at the Inlet.
3) Isolate the Cold Mains Supply to the Heat Battery.
4) Open the hot water taps to drain the system and release the pressure in the pipe work.
5) Remove all electrical cables and connections from the Heat Battery controller.
6) Remove all pipework from the Heat Battery connections, using appropriate tools and methods. Cap pipework if it cannot be removed from the Heat Battery connections.
7) Ensure that the Heat Battery is left to cool for at least 60 minutes after completion of step 2 before moving it.

11.2 DISPOSAL



This symbol on the Heat Battery and accompanying documents means the Heat Battery should not be mixed with general household waste at the end of its life.

For proper treatment, recovery and recycling, please take the Heat Battery to designated recycling centers where it should be accepted free of charge at the end of its life.

Disposing of this Heat Battery correctly will help save valuable resources and prevent any potential negative effects on human health and the environment, which could otherwise arise from inappropriate waste handling.

Please contact your local authority for further details of your nearest designated collection point. Penalties may be applicable for incorrect disposal of this waste, in accordance with your national legislation.

12. ACCESSORIES

Part Number	Description
C5435	22mm x 3/4″ Tectite Pro Elbow TX12-22mmx3/4″ (see note)
Note: 2 x C5435 are supplied with the Thermino 20, 40 & 60 ePlus products. The Thermino 80 ePlus is supplied with 4 x C5435. Please visit https://sunamp.com/en-us/thermino-eplus-accessories/ for all the latest accessories.	

Table 11 – Thermino ePlus Heat Battery Accessories

BLANK PAGE

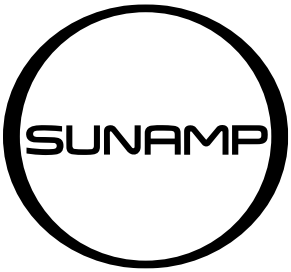

Manual Part Number: D0100

Version Number: 1.3

Publication Date: 13.11.2026

Sunamp Ltd
1 Satellite Park
Macmerry
East Lothian
EH33 1RY
Scotland

Customer Service (Phone): +44 (0)1875 610 001

Customer Service (Email): customerservice@sunamp.com

www.sunamp.com